YOUSHANG SEMICONDUCTOR

设计研发新型功率器件

各类小信号开关

中低压及高压大电流等场效应管

0755-83047638
ysbdt@szyoushang.cn
www.szyoushang.cn

企业微信二维码　企业QQ二维码

Product Summary

BV_{DSS}	$R_{DS(ON)}$ Max	I_D Max T_C = +25°C
-30V	42mΩ @ V_{GS} = -10V	-19.9A
	65mΩ @ V_{GS} = -4.5V	-16A

Features and Benefits

- Low $R_{DS(ON)}$ – Ensures On-State Losses Are Minimized
- Small Form Factor Thermally Efficient Package Enables Higher Density End Products
- Occupies just 33% of The Board Area Occupied by SO-8 Enabling Smaller End Product

Description

This new generation MOSFET is designed to minimize the on-state resistance ($R_{DS(ON)}$) yet maintain superior switching performance, making it ideal for high-efficiency power management applications.

Applications

- General purpose interfacing switches
- Power management functions

Mechanical Data

- Package: PowerDI®3333-8
- Package Material: Molded Plastic, "Green" Molding Compound. UL Flammability Classification Rating 94V-0
- Moisture Sensitivity: Level 1 per J-STD-020
- Terminal Connections Indicator: See Diagram
- Terminals: Finish — Matte Tin Annealed over Copper Leadframe. Solderable per MIL-STD-202, Method 208
- Weight: 0.072 grams (Approximate)

PowerDI3333-8 (SWP) (Type UX)

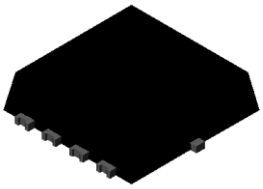

Top View

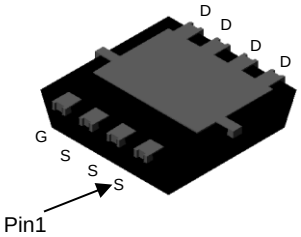

Bottom View

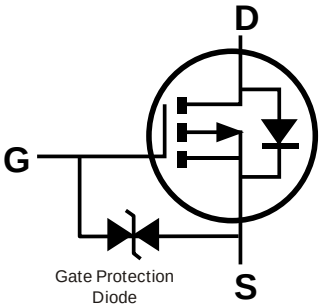

Equivalent Circuit

Maximum Ratings (@ T_A = +25°C, unless otherwise specified.)

Characteristic			Symbol	Value	Unit
Drain-Source Voltage			V_{DSS}	-30	V
Gate-Source Voltage			V_{GSS}	±20	V
Continuous Drain Current (Note 6) V_{GS} = -10V	Steady State	T_A = +25°C T_A = +70°C	I_D	-5.7 -4.6	A
Continuous Drain Current (Note 7) V_{GS} = -10V	Steady State	T_C = +25°C T_C = +70°C	I_D	-19.9 -15.9	A
Maximum Continuous Body Diode Forward Current (Note 7)			I_S	-1.3	A
Pulsed Drain Current (10µs Pulse, Duty Cycle = 1%)			I_{DM}	-76	A
Pulsed Body Diode Forward Current (10µs Pulse, Duty Cycle = 1%)			I_{SM}	-76	A
Avalanche Current (Note 8) L = 1mH			I_{AS}	-7.8	A
Avalanche Energy (Note 8) L = 1mH			E_{AS}	30.8	mJ

Thermal Characteristics (@ T_A = +25°C, unless otherwise specified.)

Characteristic		Symbol	Value	Unit
Total Power Dissipation (Note 5)	T_A = +25°C	P_D	0.9	W
Thermal Resistance, Junction to Ambient (Note 5)	Steady State	$R_{\theta JA}$	135	°C/W
Total Power Dissipation (Note 6)	T_A = +25°C	P_D	2.1	W
Thermal Resistance, Junction to Ambient (Note 6)	Steady State	$R_{\theta JA}$	61	°C/W
Thermal Resistance, Junction to Case (Note 7)		$R_{\theta JC}$	5	°C/W
Operating and Storage Temperature Range		T_J, T_{STG}	-55 to +150	°C

Electrical Characteristics (@ T_A = +25°C, unless otherwise specified.)

Characteristic	Symbol	Min	Typ	Max	Unit	Test Condition
OFF CHARACTERISTICS (Note 9)						
Drain-Source Breakdown Voltage	BV_{DSS}	-30	—	—	V	V_{GS} = 0V, I_D = -250µA
Zero Gate Voltage Drain Current	I_{DSS}	—	—	-1	µA	V_{DS} = -24V, V_{GS} = 0V
Gate-Source Leakage	I_{GSS}	—	—	±10	µA	V_{GS} = ±20V, V_{DS} = 0V
ON CHARACTERISTICS (Note 9)						
Gate Threshold Voltage	$V_{GS(TH)}$	-1.0	—	-2.1	V	V_{DS} = V_{GS}, I_D = -250µA
Static Drain-Source On-Resistance	$R_{DS(ON)}$	—	25	42	mΩ	V_{GS} = -10V, I_D = -4.9A
		—	43	65		V_{GS} = -4.5V, I_D = -3.7A
Diode Forward Voltage	V_{SD}	—	-0.7	-1.2	V	V_{GS} = 0V, I_S = -1A
DYNAMIC CHARACTERISTICS (Note 10)						
Input Capacitance	C_{iss}	—	782	—	pF	V_{DS} = -15V, V_{GS} = 0V, f = 1.0MHz
Output Capacitance	C_{oss}	—	110	—	pF	
Reverse Transfer Capacitance	C_{rss}	—	74	—	pF	
Gate Resistance	R_g	—	10.4	—	Ω	V_{DS} = 0V, V_{GS} = 0V, f = 1.0MHz
Total Gate Charge (V_{GS} = -4.5V)	Q_g	—	6.6	—	nC	V_{DS} = -15V, I_D = -4.9A
Total Gate Charge (V_{GS} = -10V)	Q_g	—	13.6	—	nC	
Gate-Source Charge	Q_{gs}	—	2.1	—	nC	
Gate-Drain Charge	Q_{gd}	—	2.7	—	nC	
Turn-On Delay Time	$t_{D(ON)}$	—	4.1	—	ns	V_{DD} = -15V, V_{GS} = -10V, I_D = -4.9A, R_G = 6Ω
Turn-On Rise Time	t_R	—	6.1	—	ns	
Turn-Off Delay Time	$t_{D(OFF)}$	—	24.6	—	ns	
Turn-Off Fall Time	t_F	—	13.1	—	ns	
Reverse Recovery Time	t_{RR}	—	12.7	—	ns	I_S = -11.5A, dI/dt = 100A/µs
Reverse Recovery Charge	Q_{RR}	—	4.8	—	nC	

Notes:
5. Device mounted on FR-4 PC board, with minimum recommended pad layout, single sided.
6. Device mounted on FR-4 substrate PC board, 2oz copper, with thermal bias to bottom layer 1-inch square copper plate.
7. Thermal resistance from junction to soldering point (on the exposed drain pad).
8. I_{AS} and E_{AS} ratings are based on low frequency and duty cycles to keep T_J = +25°C.
9. Short duration pulse test used to minimize self-heating effect.
10. Guaranteed by design. Not subject to product testing.

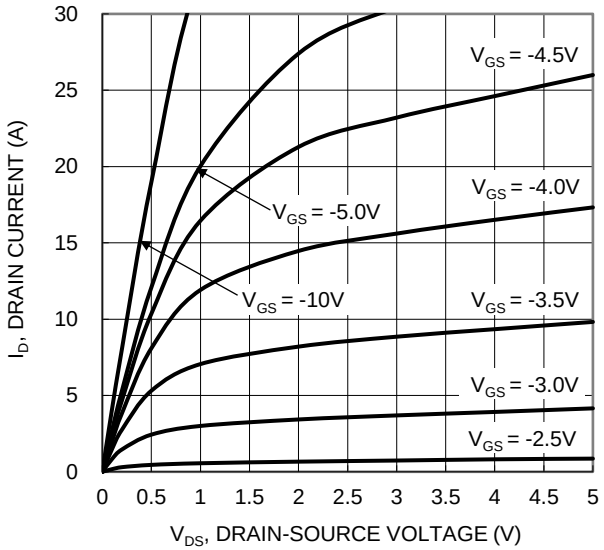

Figure 1. Typical Output Characteristic

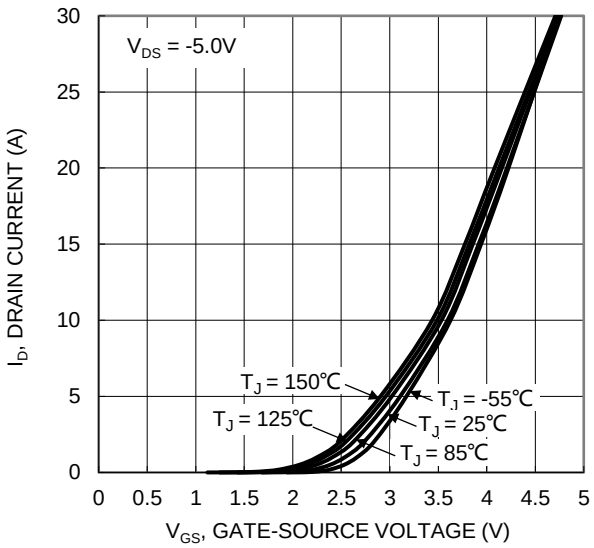

Figure 2. Typical Transfer Characteristic

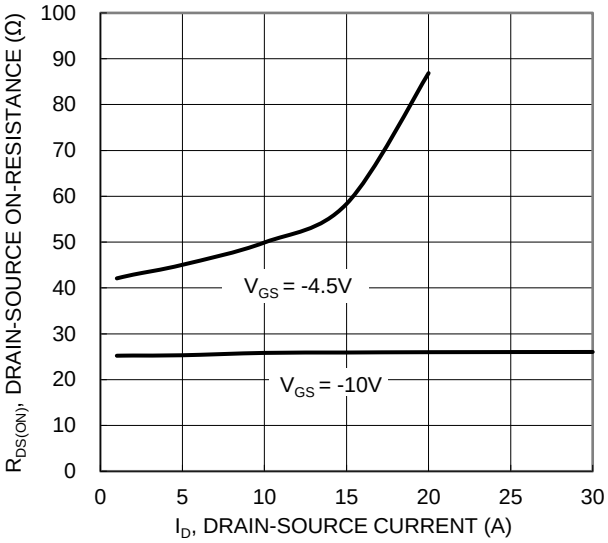

Figure 3. Typical On-Resistance vs. Drain Current and Gate Voltage

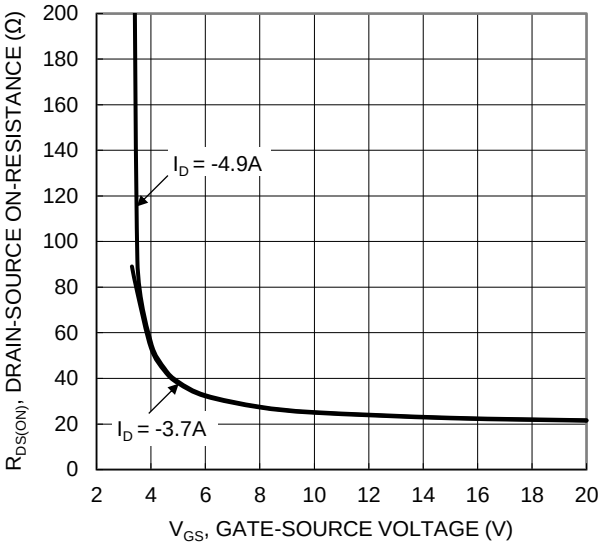

Figure 4. Typical Transfer Characteristic

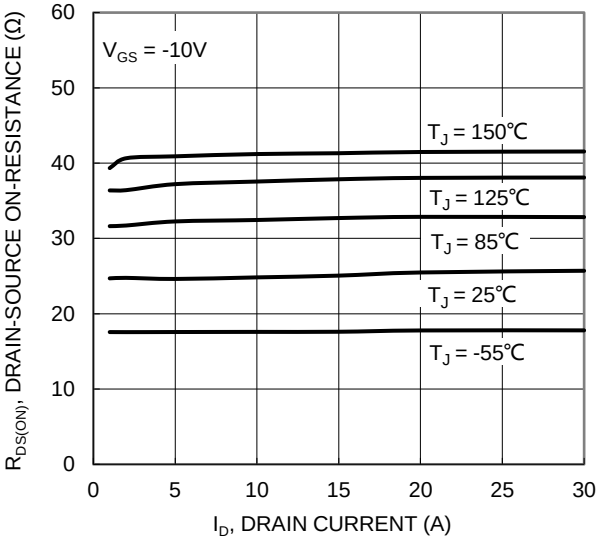

Figure 5. Typical On-Resistance vs. Drain Current and Temperature

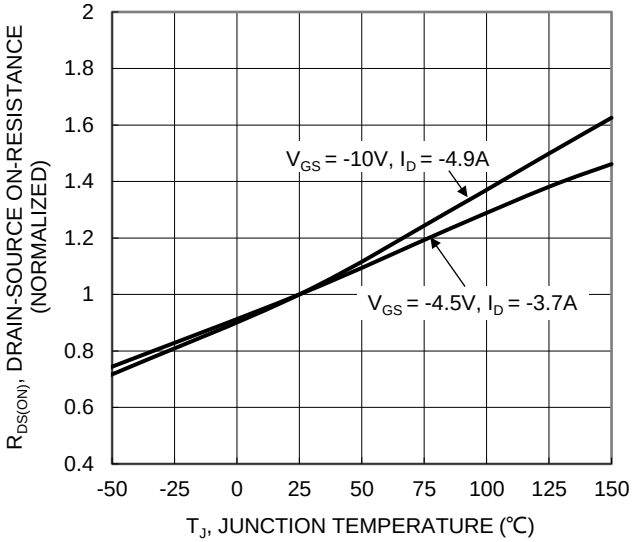

Figure 6. On-Resistance Variation with Temperature

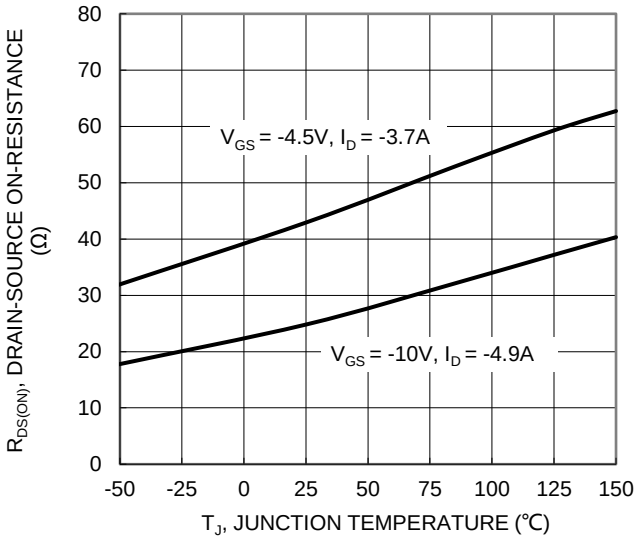

Figure 7. On-Resistance Variation with Temperature

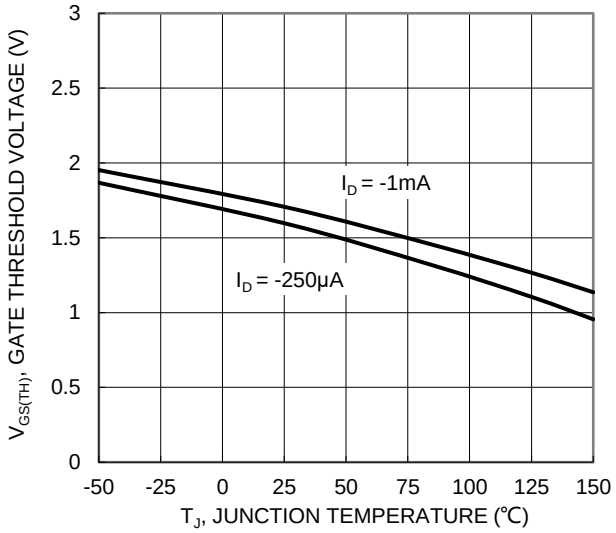

Figure 8. Gate Threshold Variation vs. Temperature

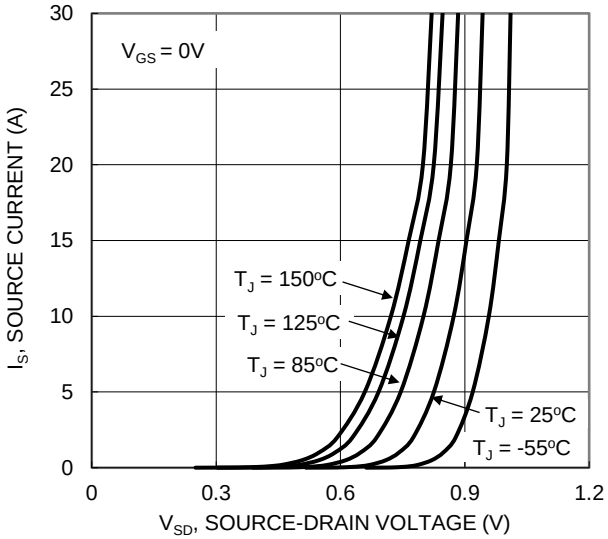

Figure 9. Diode Forward Voltage vs. Current

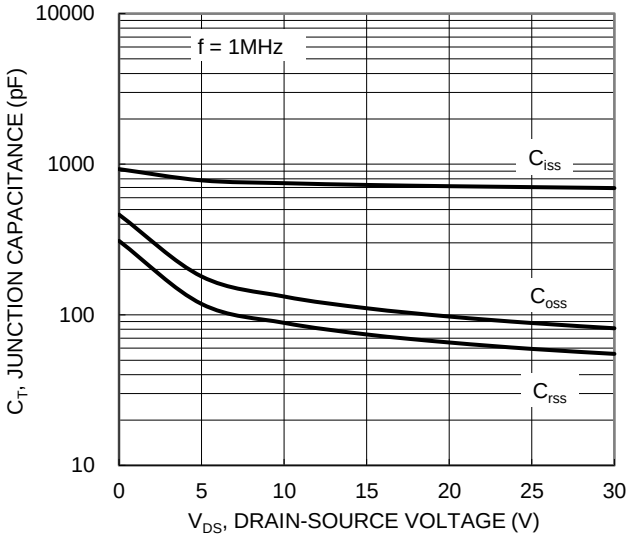

Figure 10. Typical Junction Capacitance

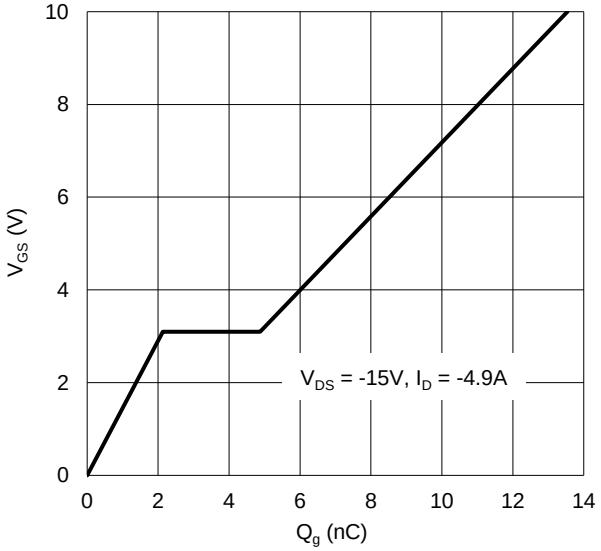

Figure 11. Gate Charge

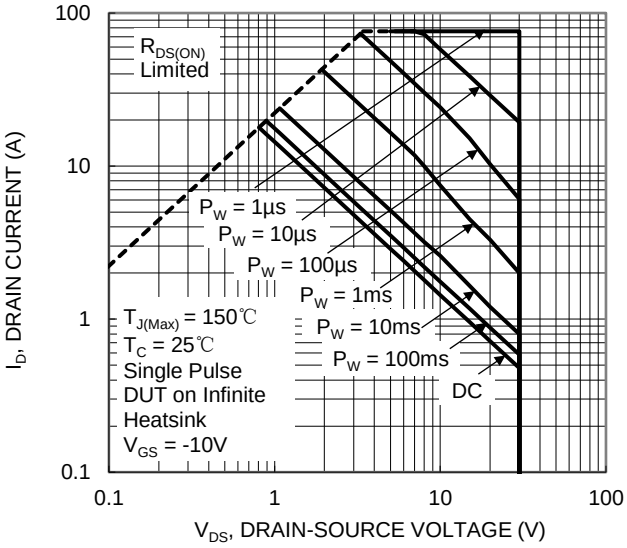

Figure 12. SOA, Safe Operation Area

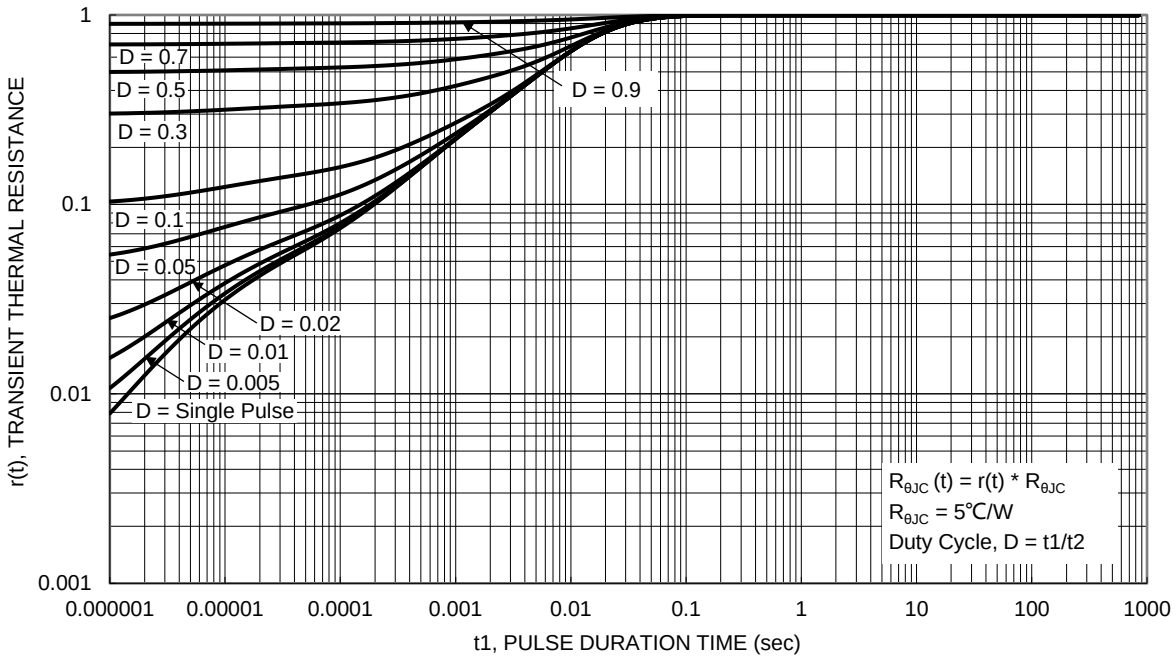

Figure 13. Transient Thermal Resistance

Package Outline Dimensions

PowerDI3333-8 (SWP) (Type UX)

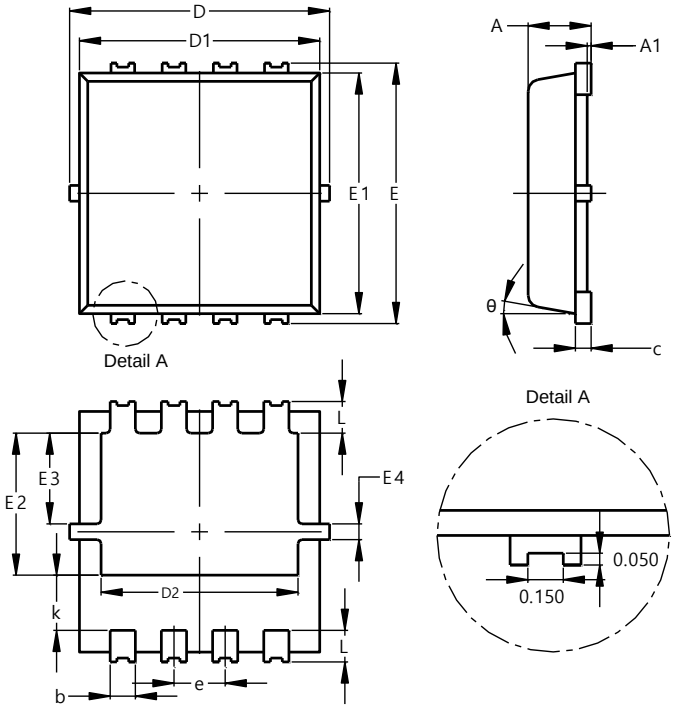

PowerDI3333-8 (SWP) (Type UX)			
Dim	**Min**	**Max**	**Typ**
A	0.75	0.85	0.80
A1	0.00	0.05	--
b	0.25	0.40	0.32
c	0.10	0.25	0.15
D	3.20	3.40	3.30
D1	2.95	3.15	3.05
D2	2.30	2.70	2.50
E	3.20	3.40	3.30
E1	2.95	3.15	3.05
E2	1.60	2.00	1.80
E3	0.95	1.35	1.15
E4	0.10	0.30	0.20
e	–	–	0.65
k	0.50	0.90	0.70
L	0.30	0.50	0.40
θ	0°	12°	10°
All Dimensions in mm			

Suggested Pad Layout

PowerDI3333-8 (SWP) (Type UX)

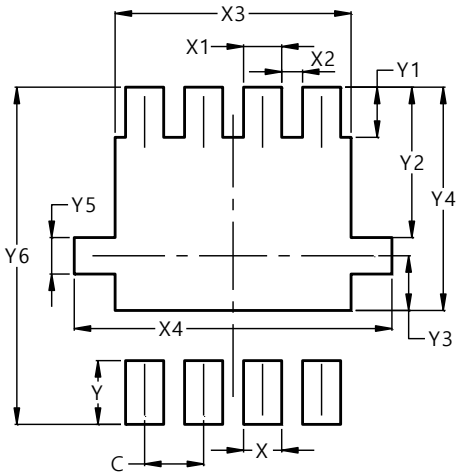

Dimensions	Value (in mm)
C	0.650
X	0.420
X1	0.420
X2	0.230
X3	2.600
X4	3.500
Y	0.700
Y1	0.550
Y2	1.650
Y3	0.600
Y4	2.450
Y5	0.400
Y6	3.700